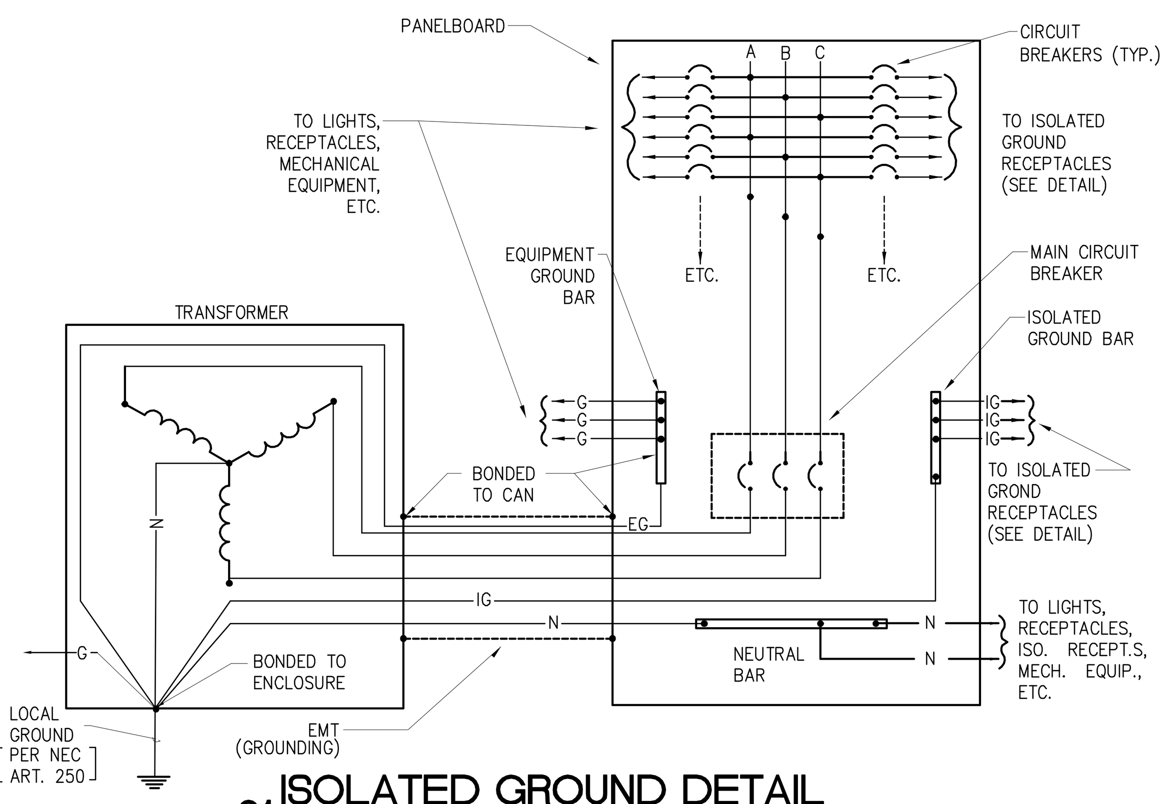

01 ISOLATED GROUND DETAIL
SCALE: NO SCALE

TRANSFORMER FEEDER (CU/AL) SCHEDULE

SYMBOL	XFMR SIZE (KVA)	PRIMARY SIDE MOCP (AMPS)	PRIMARY COPPER (THHN) CONDUCTORS	PRIMARY COPPER GROUND EA. SET	PRIMARY COPPER CONDUIT SIZE (MIN)	PRIMARY ALUMINUM (XHHW) CONDUCTORS	PRIMARY ALUMINUM GROUND EA. SET	PRIMARY ALUMINUM CONDUIT SIZE (MIN)	SYMBOL	SECONDARY SIDE MOCP (AMPS)	SECONDARY COPPER (THHN) CONDUCTORS	SECONDARY COPPER GROUND EA. SET	SECONDARY COPPER CONDUIT SIZE (MIN)	SECONDARY ALUMINUM (XHHW) CONDUCTORS	SECONDARY ALUMINUM GROUND EA. SET	SECONDARY ALUMINUM CONDUIT SIZE (MIN)	XFMR GROUNDING CONDUCTOR CU	XFMR GROUNDING CONDUCTOR AL	INSULATION TYPE CU	INSULATION TYPE AL
A	45	50	3 #6	#10	3/4"	3 #4	#8	1"	B	125	4 #1	#6	2"	4 #2/0	#4	2"	#6	#4	THHN/THWN	XHHW
C	75	90	3 #2	#8	1-1/4"	3 #1/0	#6	1-1/2"	D	200	4 #3/0	#4	2-1/2"	4 #250 MCM	#2	2-1/2"	#4	#2	THHN/THWN	XHHW
E	112.5	125	3 #1	#6	1-1/2"	3 #2/0	#4	2"	F	300	4 #350	#2	3-1/2"	4 #500 MCM	#1/0	3"	#2	#1/0	THHN/THWN	XHHW
G	150	175	3 #2/0	#6	2"	3 #4/0	#4	2"	H	400	2 SETS OF 4#3/0	#1/0	2-1/2"	2 SETS OF 4#250 MCM	#1/0	2-1/2"	#1/0	#1/0	THHN/THWN	XHHW
I	225	250	3 #250 MCM	#4	2-1/2"	3 #350 MCM	#2	2-1/2"	J	600	2 SETS OF 4#350 MCM	#2/0	3-1/2"	2 SETS OF 4#500 MCM	#4/0	3"	#2/0	#4/0	THHN/THWN	XHHW
K	300	350	3 #500 MCM	#3	3-1/2"	2 SETS 3#4/0	#1	2"	L	800	3 SETS OF 4#300 MCM	#3/0	3"	3 SETS OF 4#400 MCM	#250 MCM	3"	#3/0	#250 MCM	THHN/THWN	XHHW

BRANCH CIRCUIT CONDUCTOR SCHEDULE

BREAKER OR FUSE	QUANTITY OF CONDUCTORS PHASE & NEUTRAL	GROUND SIZE	PHASE AND NEUTRAL SIZE	CONDUIT SIZE (INCHES)	INSULATION TYPE	CONDUCTOR TYPE	REMARKS
1P-15A	2	12	12	3/4	THHN/THWN	CU	
3P-15A	3	12	12	3/4	THHN/THWN	CU	
1P-20A	2	12	12	3/4	THHN/THWN	CU	
1P-30A	2	10	10	3/4	THHN/THWN	CU	
2P-20A	2	12	12	3/4	THHN/THWN	CU	
2P-40A	3	8	8	1	THHN/THWN	CU	POPPER ONLY
3P-25A	3	8	10	3/4	THHN/THWN	CU	
3P-30A	3	10	10	3/4	THHN/THWN	CU	
3P-40A	3	10	8	1	THHN/THWN	CU	
3P-30A	4	10	8	1	THHN/THWN	CU	PROJECTORS ONLY
3P-45A	3	10	6	1	THHN/THWN	CU	
3P-60A	3	10	4	1-1/4	THHN/THWN	CU	

NOTES:
1. ALL CONDUCTORS AND CONDUITS ARE TO BE SIZED PER 2002 NEC, 310-16, 250-95 AND TABLE C.
2. CONTRACTOR TO UPSIZE AS REQUIRED FOR VOLTAGE DROP.
3. GROUNDING CONDUCTORS TO BE SIZED ACCORDING TO REQUIREMENTS OF NEC SECTION 250

NOTES ON MC CABLE

MC CABLE, WHEN ALLOWED BY THE GOVERNING AUTHORITIES, MAY ONLY BE USED ON 12 ga (20 AMP) BRANCH CIRCUITS ABOVE LAY-IN CEILINGS, BUT NOT IN THE AUDITORIUMS.

IF MC CABLE IS USED, IT SHALL BE SUPPORTED AND SECURED AT INTERVALS NOT EXCEEDING SIX FOOT (6') AND NOT LIE ON ANY CEILING GRID. CABLES NO LARGER THAN NO.10 WITH FOUR (4) OR LESS CONDUCTORS SHALL BE SECURED WITHIN TWELVE INCHES (12") OF EVERY BOX, CABINET OR FITTING. (NEC 2002 SECTION 330.30)

ELECTRICAL NOTES

1. ALL FEEDERS ARE COPPER UNLESS NOTED OTHERWISE.
2. ALL CONDUIT SIZES ARE BASED UPON METALLIC THWN.
3. ALL ELECTRICAL EQUIPMENT TO BE GROUNDED AND BONDED IN ACCORDANCE WITH NEC 230-63.
4. CONTRACTOR TO VERIFY EXACT LOCATION OF UTILITY TRANSFORMER WITH THE UTILITY.
5. TRANSFORMER AND METER TO BE INSTALLED AS PER POWER COMPANY'S EXACT REQUIREMENTS.
6. ALL AIC RATINGS OF BREAKERS SHALL MEET OR EXCEED THE AIC RATING OF THE RESPECTIVE PANEL BOARD IN WHICH IT IS INSTALLED. NO SERIES RATING IS ALLOWED.

FEEDER SCHEDULE

SYMBOL	OVER-CURRENT DEVICE RATING	COPPER (THHN/THWN INSULATION) CONDUCTORS 2005 NEC 310.13	COPPER GROUND EACH SET 2005 NEC 250.122	COPPER CONDUIT SIZE (INCHES) EA. SET	ALUMINUM (XHHW INSULATION) CONDUCTORS 2005 NEC 310.13	ALUMINUM GROUND EACH SET 2005 NEC 250.122	ALUMINUM CONDUIT SIZE (INCHES) EA. SET
1	40	3 #8	#10	3/4"	NOT TO BE USED		
2	40	4 #8	#10	3/4"	NOT TO BE USED		
3	60	3 #4	#10	1"	NOT TO BE USED		
4	60	4 #4	#10	1-1/4"	NOT TO BE USED		
5	125	3 #1	#6	1-1/2"	3 #2/0	#4	2"
6	125	4 #1	#6	1-1/2"	4 #2/0	#4	2"
7	150	3 #1/0	#6	1-1/2"	3 #3/0	#4	2"
8	150	4 #1/0	#6	2"	4 #3/0	#4	2"
9	175	3 #2/0	#6	2"	3 #4/0	#4	2-1/2"
10	175	4 #2/0	#6	2"	4 #4/0	#4	2-1/2"
11	200	4 #3/0	#6	2"	4 #250 MCM	#4	2-1/2"
12	225	4 #4/0	#4	2-1/2"	4 #300 MCM	#2	2-1/2"
13	300	4 #350 MCM	#4	3"	4 #500 MCM	#2	3"
14		NOT USED					
15	400	2 SETS OF 4 #3/0	#3	2"	2 SETS OF 4 #250	#1	2-1/2"
16	500	2 SETS OF 4 #250	#2	3"	2 SETS OF 4 #300	#1/0	2-1/2"
17	600	2 SETS OF 4 #350	#1	3-1/2"	2 SETS OF 4 #400	#2/0	3"
18	600	2 SETS OF 3 #350	#1	3-1/2"	2 SETS OF 3 #400	#2/0	3"
19	800	3 SETS OF 4 #300	#1/0	3-1/2"	3 SETS OF 4 #400	#3/0	3"
20	800	3 SETS OF 3 #300	#1/0	3-1/2"	3 SETS OF 3 #400	#3/0	3"
21	1000	3 SETS OF 4 #400	#2/0	3-1/2"	3 SETS OF 4 #600	#4/0	3-1/2"
22	1200	4 SETS OF 4 #350	#3/0	3-1/2"	4 SETS OF 4 #500	250 MCM	3"
23	1400	4 SETS OF 4 #500	#4/0	3-1/2"	5 SETS OF 4 #500	350 MCM	3"
24	1600	5 SETS OF 4 #400	#4/0	3-1/2"	5 SETS OF 4 #600	350 MCM	3-1/2"
25		NOT USED					
26	2000	5 SETS OF 4 #500	250 MCM	3-1/2"	6 SETS OF 4 #600	400 MCM	3-1/2"

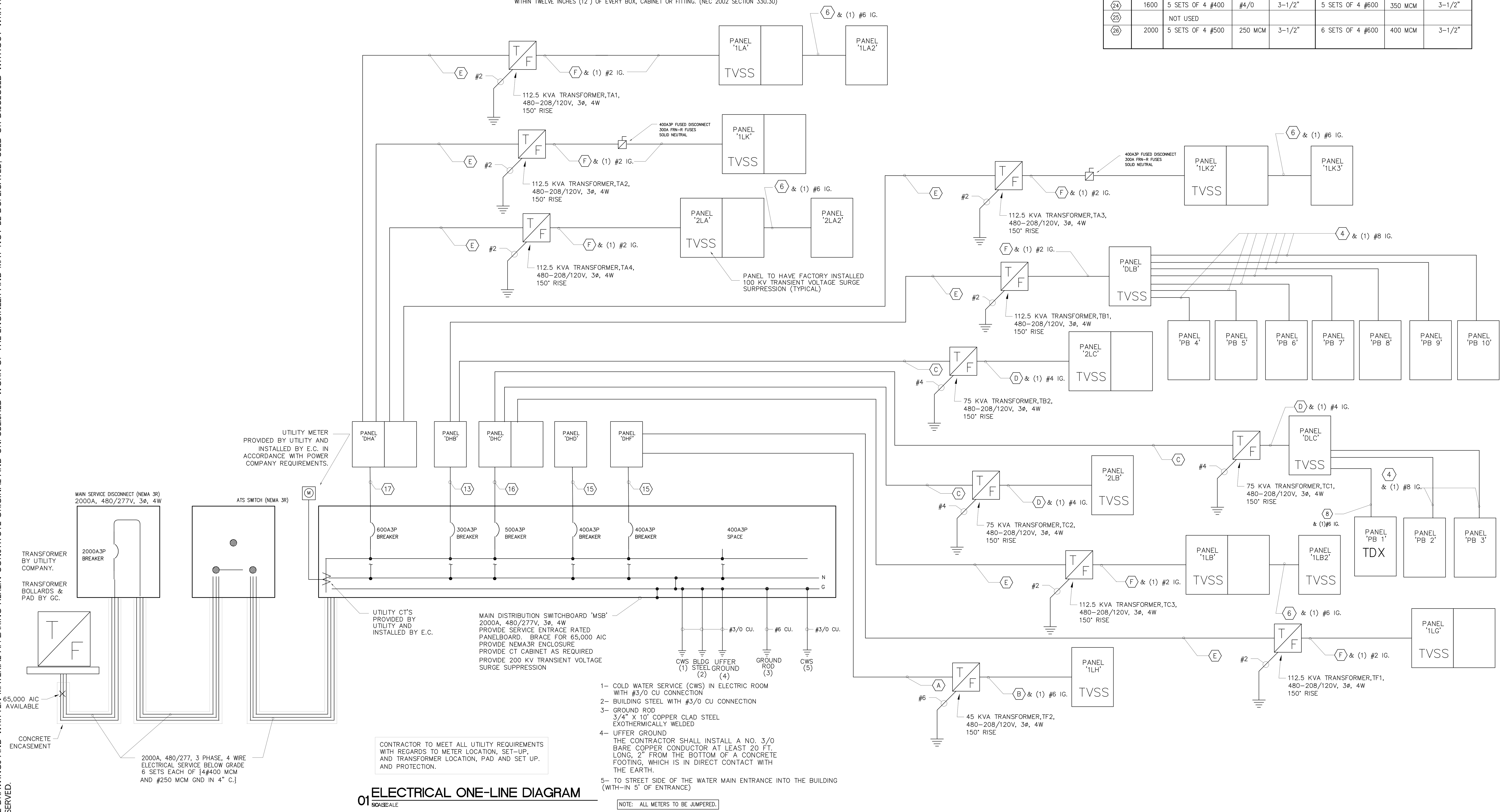

01 ELECTRICAL ONE-LINE DIAGRAM
NO SCALE

NOTE: ALL METERS TO BE JUMPERED.

5G Studio Collaborative, LLC.
800 Jackson | Suite 500 | Dallas, TX 75202
260 Peachtree Street | Suite 500 | Atlanta, GA 30303

ARCHITECT
5G Studio Collaborative, LLC..
800 Jackson St., Suite 500
Dallas, TX 75202
Rick Walker - 214.670.0050

STRUCTURAL ENGINEER
L.A. Fuess Partners Engineers
3333 Lee Parkway, Suite 300
Dallas, TX 75219
Jeff Truly - 214.871.7010

MEP ENGINEER
EnviroDesign, Inc.
900 Ranch Rd 620 So., Suite C101-301
Austin, TX 78738
Sam Patton - 512.693.9015
Texas PE Firm Number F-3847

24 May. 2017
Sam E. Patton, P.E.
TX PE # 57170

DRAWINGS & SPECIFICATIONS ARE THE PROPERTY OF ENVIRODESIGN. COPIES OF THE DRAWINGS & SPECIFICATIONS RETAINED BY THE CLIENT MAY BE UTILIZED ONLY FOR HIS USE & FOR OCCUPYING THE PROJECT FOR WHICH THEY WERE PREPARED, & NOT FOR THE CONSTRUCTION OF ANY OTHER PROJECT.

REV	DATE	ISSUE
	5/12/17	PERMIT ISSUE
	5/24/17	ISSUE FOR BID

CINERGY AMARILLO

SHEET DESCRIPTION
ELECTRICAL ONE-LINE DIAGRAM

2016-151
PROJECT NUMBER

E7.1
SHEET NUMBER

© 2017 ENVIRODESIGN,INC. ALL RIGHTS RESERVED. ALL DRAWINGS AND WRITTEN MATERIAL APPEARING HEREIN CONSTITUTE ORIGINAL AND UNPUBLISHED WORK OF THE ENGINEER AND MAY NOT BE DUPLICATED, USED OR DISCLOSED WITHOUT WRITTEN CONSENT OF ENVIRODESIGN, INC.
Plotted By: Dan Habetler 24 May. 2017 Drawing File: E:\Dropbox (EnviroDesign)\EnviroDesign Team Folder\Current\2017-055 Cinergy Amarillo\ 2017-055E71.dwg
E:\Dropbox (EnviroDesign)\EnviroDesign Team Folder\Current\2017-055 Cinergy Amarillo\2017-055E71.dwg, 5/24/2017 3:48:15 PM, PDF-XChange 3.0.pc3