NOTE: SEISMIC RESTRAINT IS THE MECHANICAL CONTRACTOR RESPONSIBILITY. COORDINATE ALL REQUIREMENTS WITH THE GENERAL CONTRACTOR PRIOR TO BID AND INSTALLATION

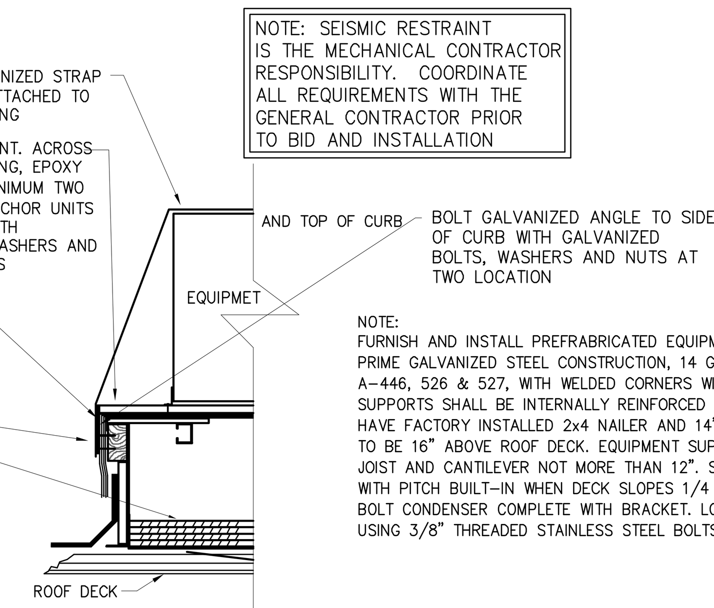

NOTE:
FURNISH AND INSTALL PREFRABRICATED EQUIPMENT MOUNTING PLATFORM TO BE OF PRIME GALVANIZED STEEL CONSTRUCTION, 14 GAUGE AS REQUIRED, MEETING ASTM A-446, 526 & 527, WITH WELDED CORNERS WITH SEAMS JOINED BY CONTINUOUS WELD. SUPPORTS SHALL BE INTERNALLY REINFORCED WITH 18 GAUGE CHANNES 24" ON CENTER, HAVE FACTORY INSTALLED 2x4 NAILER AND 14" GAUGE COUNTERFLASHING TOP. HEIGHT TO BE 16" ABOVE ROOF DECK. EQUIPMENT SUPPORT SHALL SPAN A MINIMUM OF TWO JOIST AND CANTILEVER NOT MORE THAN 12". SUPPORT SHALL BE LEVEL AT THE TOP WITH PITCH BUILT-IN WHEN DECK SLOPES 1/4 OF AN INCH PER FOOT OR GREATER. BOLT CONDENSER COMPLETE WITH BRACKET. LOCKWASHERS & NUTS TO UNISTRUT USING 3/8" THREADED STAINLESS STEEL BOLTS.

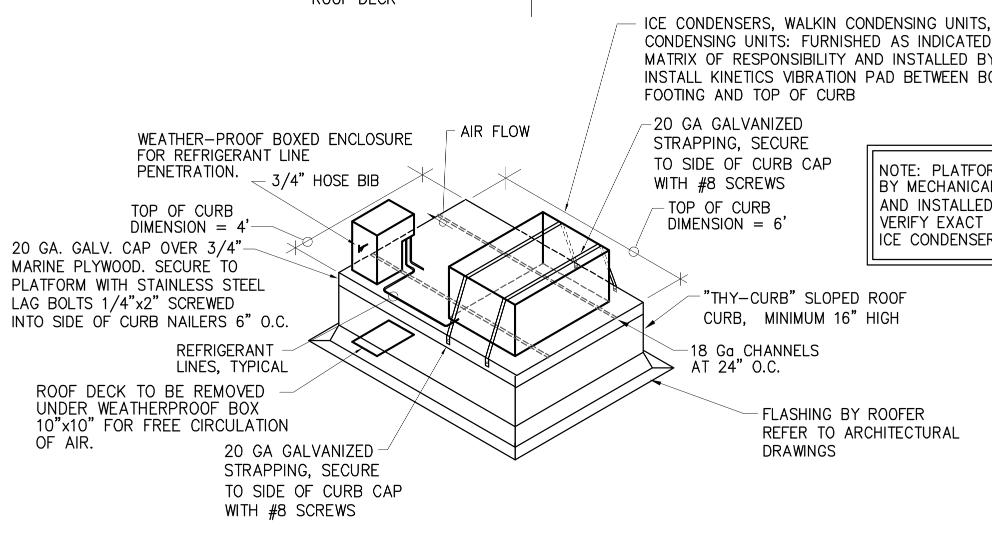

NOTE: PLATFORM FURNISHED BY MECHANICAL CONTRACTROR AND INSTALLED BY CONTRACTOR. VERIFY EXACT SIZE WITH ICE CONDENSERS

02 REFRIGERATION EQUIPMENT PLATFORM
SCALE: NONE

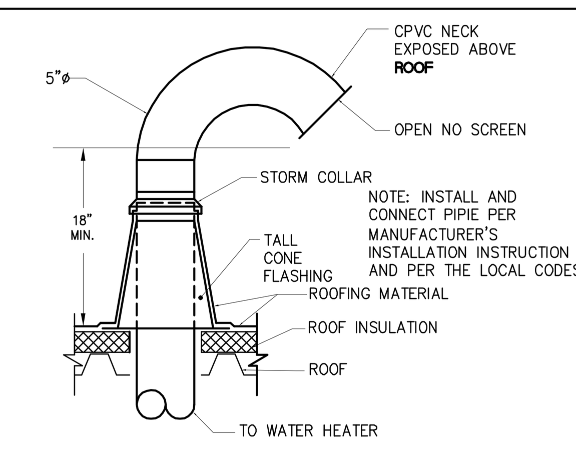

NOTE: INSTALL AND CONNECT PIPIE PER MANUFACTURER'S INSTALLATION INSTRUCTION AND PER THE LOCAL CODES.

18 COMBUSTION GOOSENECK DETAIL
SCALE: NONE

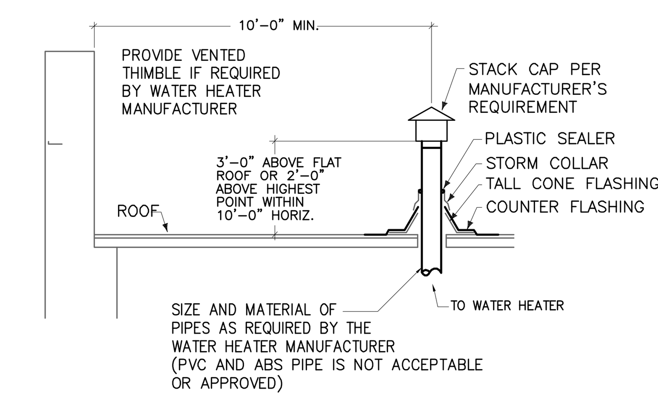

19 COMBUSTION GOOSENECK DETAIL
SCALE: NONE

NOTE:
MINIMUM RTU, EXHAUST FAN, ROOF HOOD, PLATFORM, ETC. CURB HEIGHTS ARE 16". THE CONTRACTOR SHALL INCREASE CURB HEIGHT AS REQUIRED TO MAINTAIN A MINIMUM OF 8" FROM THE TOP OF THE ROOF SURFACE TO THE TOP OF THE CURB. GC AND MC TO COORDINATE DEPTH OF ROOF INSULATION, INCLUDING ANY CRICKETS AT CURBS AND INCLUDE IN BID ANY CURB HEIGHT INCREASES TO MEET ABOVE REQUIREMENTS.

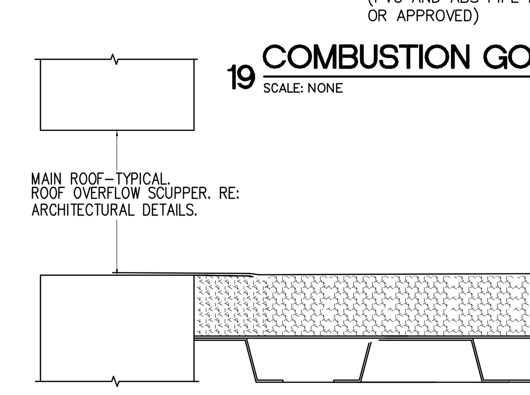

15 ROOF SCUPPER INSTALLATION
SCALE: NO SCALE

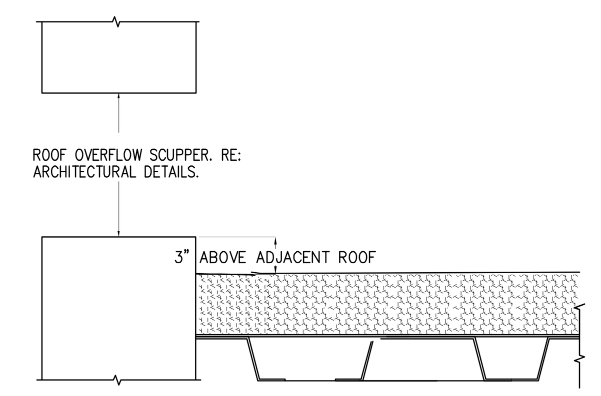

14 ROOF OVERFLOW SCUPPER INSTALLATION
SCALE: NO SCALE

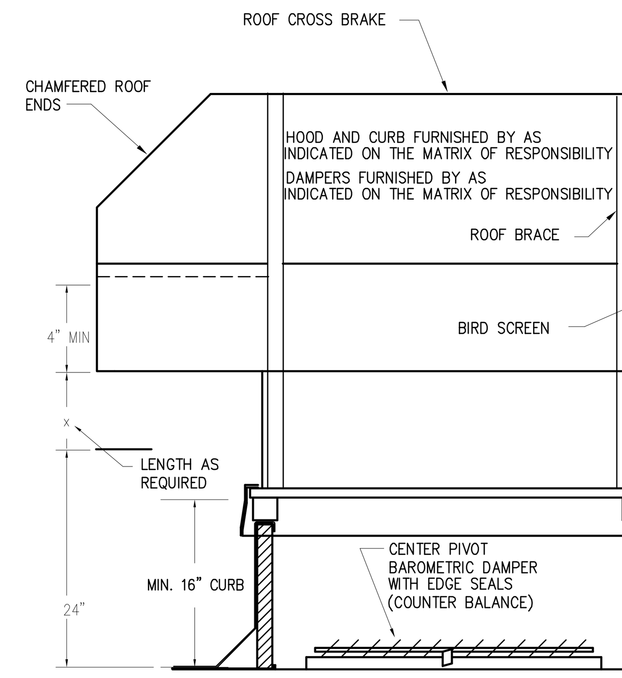

NOTE:
1. SECURE ROOF CURB TO STRUCTURAL WITH 2 - #8 SCREWS ON FOUR SIDES
2. ATTACH HOOD ASSEMBLY TO CURB WITH 2 - #8 SCREWS ON FOUR SIDES

03 BAROMETRIC RELIEF HOOD CURB
SCALE: NONE

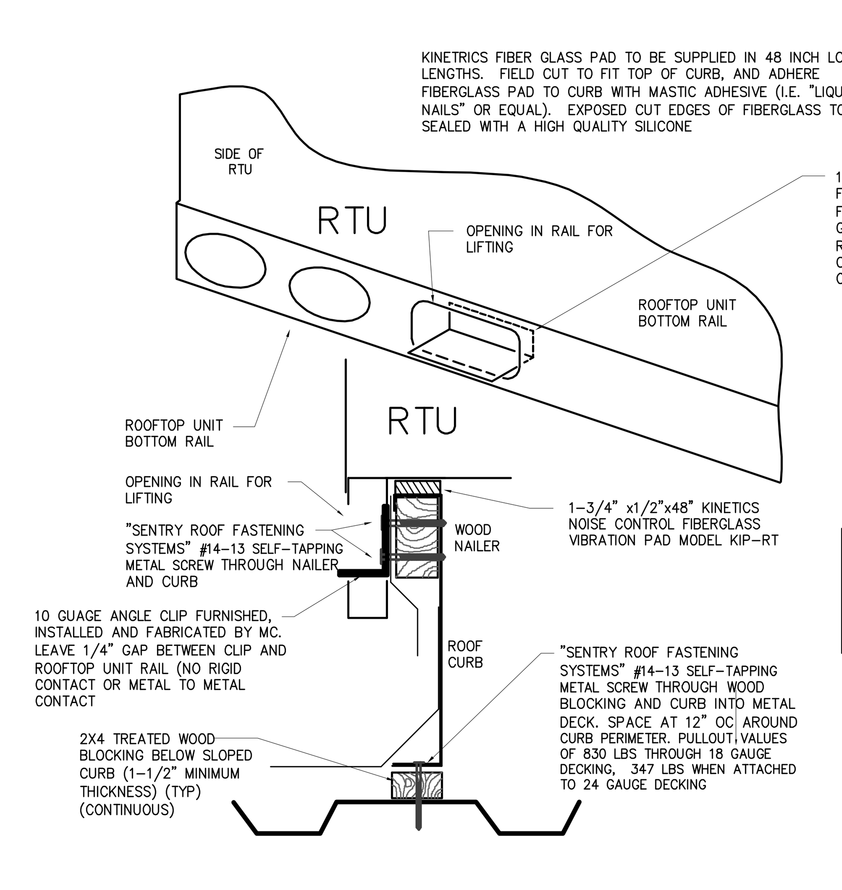

KINETICS VIBRATION ISOLATION PAD FURNISHED AS INDICATED ON THE MATRIC OF RESPONSIBILITY INSTALLED BY CONTRACTOR

16 RTU RESTRAINT
SCALE: NONE

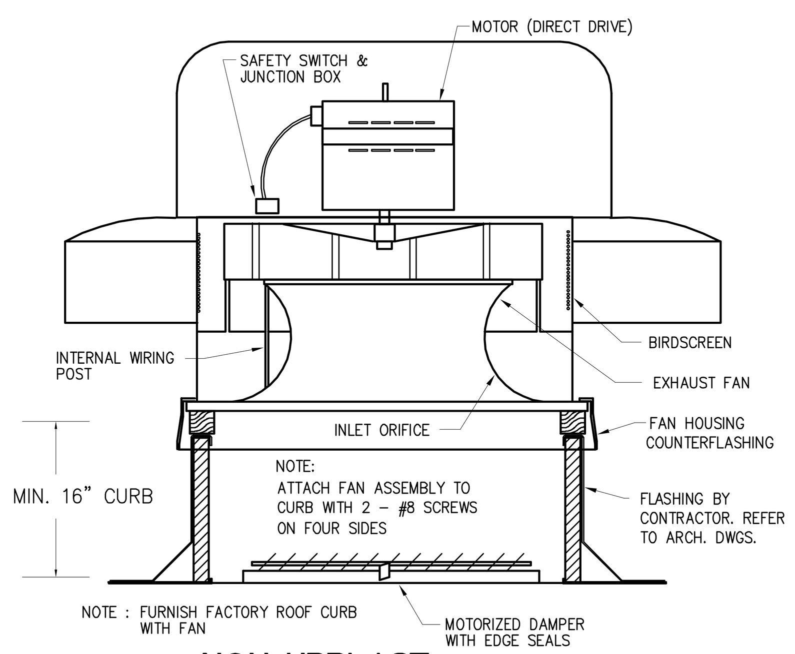

01 NON-UPBLAST ROOF EXHAUST FAN
SCALE: NONE

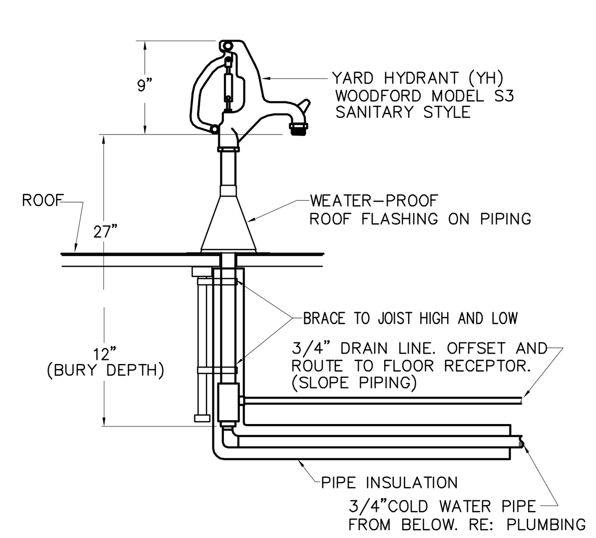

04 ROOFTOP YARD HYDRANT DETAIL
Scale: NOT TO SCALE

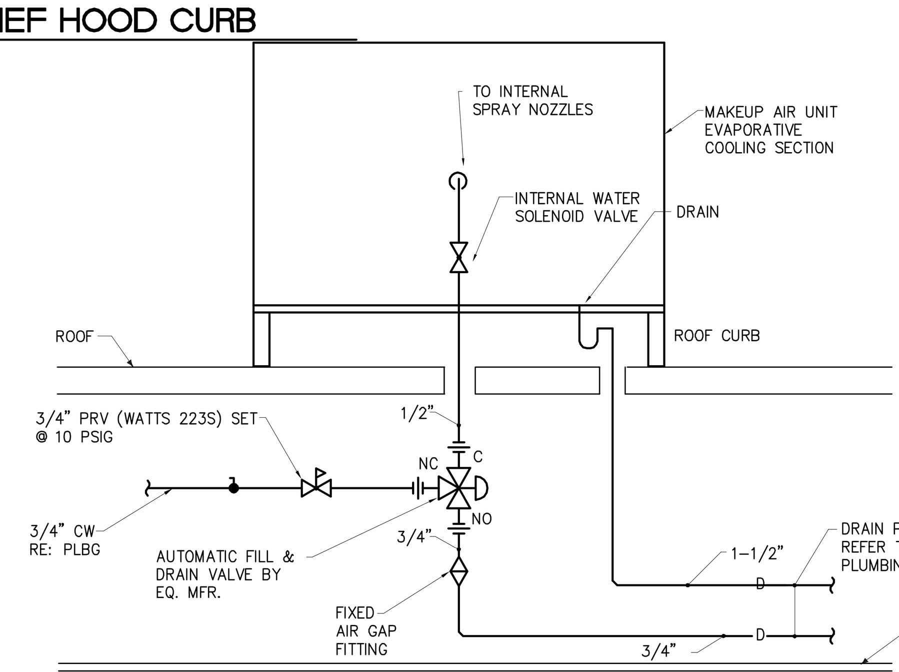

13 MAU EVAP COOLER PIPING DETAIL
SCALE: NONE

NOTE:
REFER TO ROOF PLAN FOR QUANTITY

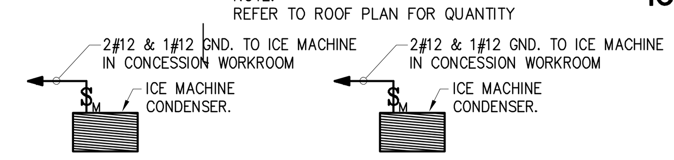

1. COMPRESSOR FOR ICE MACHINE SHALL BE FURNISHED AS INDICATED ON THE MATRIX OF RESPONSIBILITY, INSTALLED BY CONTRACTOR.
2. POWER & CONTROL WIRING INSTALLED BY THE CONTRACTOR.
3. PRECHARGED REFRIGERANT LINE KITS FURNISHED AS INDICATED ON THED MATRIX OF RESPONSIBILITYS FOR EACH ICE MACHINE CONDENSING UNIT. CONTRACTOR SHALL INSTALL REFRIGERANT REFRIGERANT LINES: 3/8" LIQUID & 1/2" SUCTION (ICE MACHINE)
4. CONTRACTOR SHALL COIL EXCESS REFRIGERANT LINES ABOVE WORK ROOM CEILIGN.
5. UNITS TO BE MOUNTED ON TREATED TIMBERS. REFER TO DETAILS.
6. SEE ROOF PLAN FOR QUANTITY.
7. CONTRACTOR TO FURNISH AND INSTALL REFRIGERANT TRAPS FOR EVERY 15 FT IN VERTICAL RISE OF REFRIGERATION PIPING.

CONFIRM EXACT ROUGH-IN REQUIREMENTS FOR CONDENSER UNIT PRIOR TO INSTALLATION

07 ROOF MTD. ICE MACHINE CONDENSER
SCALE: NONE

NOTE:
REFER TO ROOF PLAN FOR QUANTITY

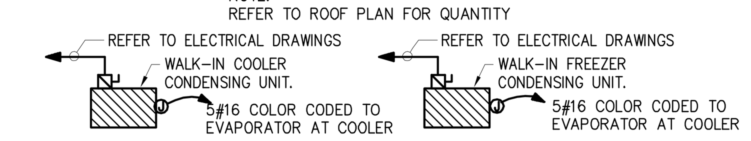

1. CONDENSING UNITS FOR THE WALK-IN COOLER SHALL FURNISHED AND INSTALLED AS SHOWN ON THE MATRIX OF RESPONSIBILITY
2. POWER & CONTROL WIRING INSTALLED BY THE CONTRACTOR.
3. REFRIGERANT PIPING FURNISH & INSTALL AS INDICATED ON THE MATRIX OF RESPONSIBILITY. FOR EVAP. COIL INSTALL ANTICIPATED WALK-IN REFRIGERANT LINES: 1/2" LIQUID & 3/4" SUCTION. CONFIRM EXACT SIZE OF REFRIGERANT LINES WITH MANUFACTURER PRIOR TO PURCHASE
4. CONTRACTOR SHALL COIL EXCESS REFRIGERANT LINES ABOVE WORK ROOM CEILING.
5. CONTRACTOR TO FURNISH AND INSTALL REFRIGERANT TRAPS FOR EVERY 10 FT IN VERTICAL RISE OF REFRIGERATION PIPING.
6. SEE ROOF PLAN FOR QUANTITY.

CONFIRM EXACT ROUGH-IN REQUIREMENTS FOR CONDENSING UNITS PRIOR TO INSTALLATION

05 ROOF MTD. WALK-IN COOLER AND FREEZEER CONDENSING UNITS
SCALE: NONE

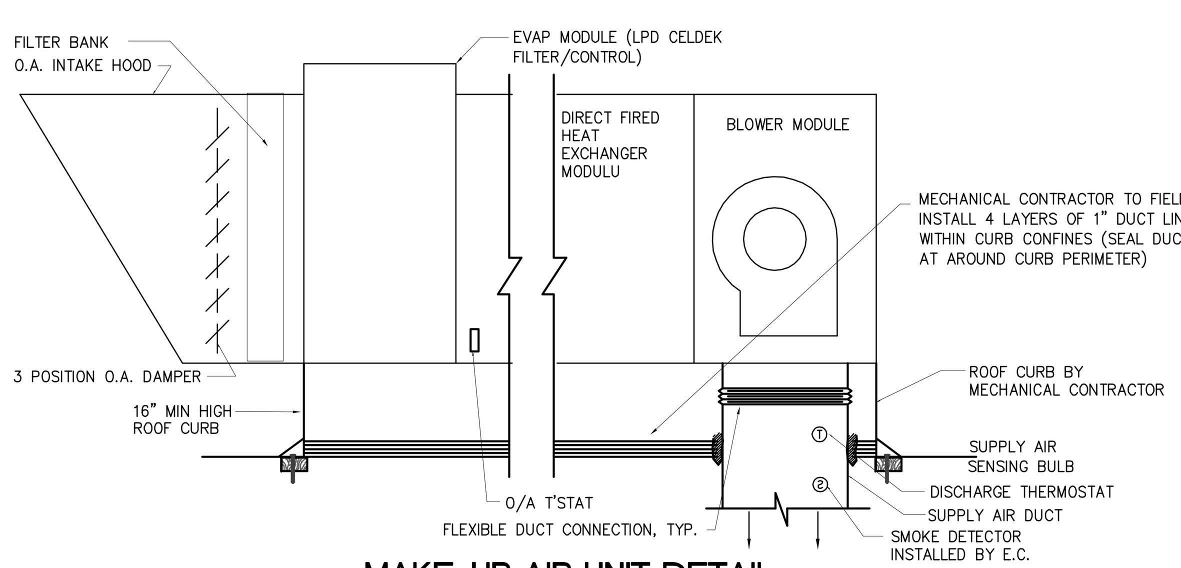

09 MAKE-UP AIR UNIT DETAIL
SCALE: NONE

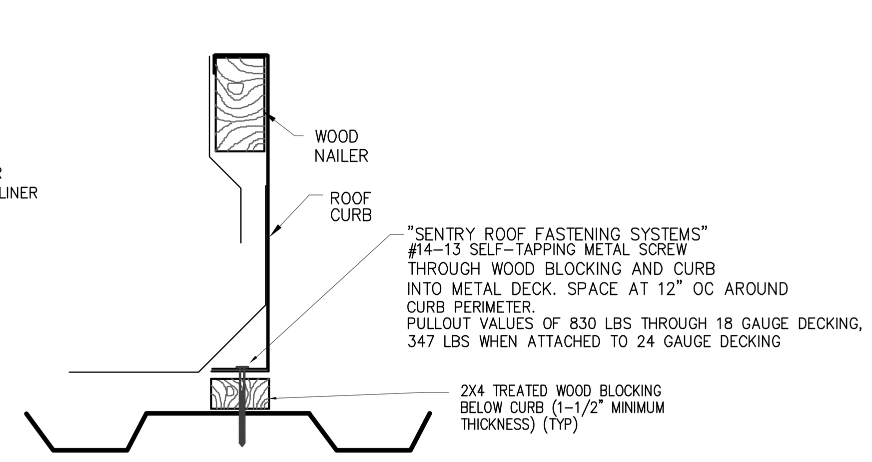

10 CURB RESTRAINT DETAIL
SCALE: NONE — DETAIL APPLIES TO ALL ROOF CURBS

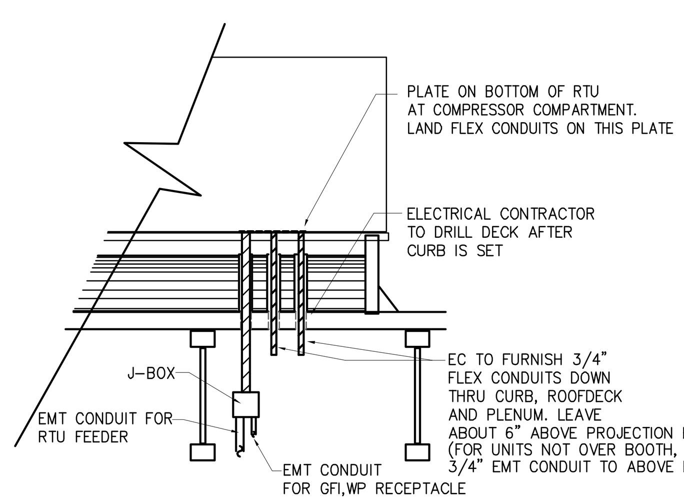

FOR LOBBY, BOX OFFICE, ETC. ROOFTOP UNITS NOT LOCATED OVER THE PROJECTION BOOTH, THE EC SHALL EXTEND THE EMPTY CONDUITS TO THE PROJECTION BOOTH CEILING PLENUM OR AREA.

11 RTU CONDUITS
SCALE: NONE

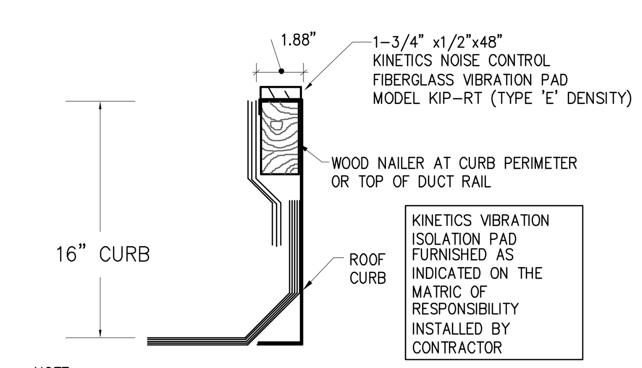

KINETICS VIBRATION ISOLATION PAD FURNISHED AS INDICATED ON THE MATRIC OF RESPONSIBILITY INSTALLED BY CONTRACTOR

NOTE:
FIBER GLASS PAD TO BE SUPPLIED IN 48 INCH LONG LENGTHS. FIELD CUT TO FIT TOP OF CURB, AND ADHERE FIBERGLASS PAD TO CURB WITH MASTIC ADHESIVE (I.E. "LIQUID NAILS" OR EQUAL). EXPOSED CUT EDGES OF FIBERGLASS TO BE SEALED WITH A HIGH QUALITY SILICONE CAULK.

06 TOP OF CURB FIBERGLASS PAD
SCALE: NONE

REFER TO ARCHITECTURAL DRAWING A20.3 FOR WALKING PAD LOCATIONS AROUND PERIMETER OF ROOFTOP UNITS

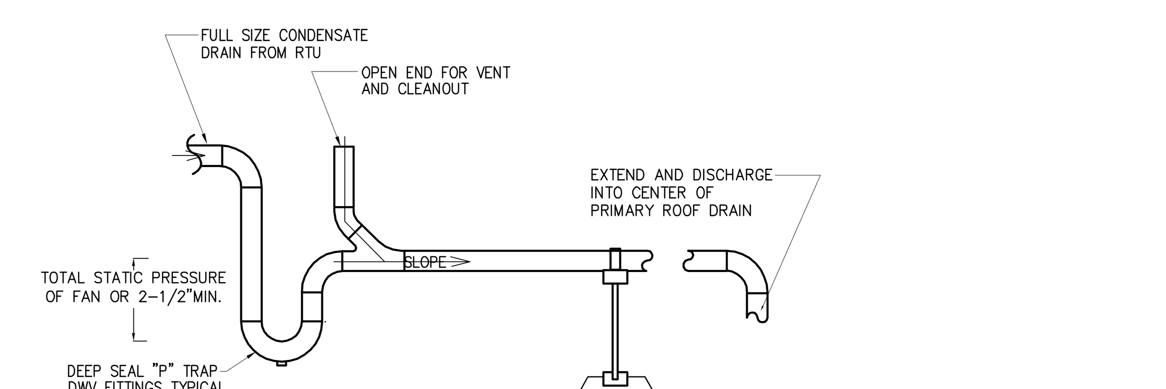

NOTE:
RTU ROOFTOP PIPING SHALL BE SUPPORTED ON ROOFTOP STANDEE SUPPORTS, SECURED AND SLOPED TO ROOFTOP PRIMARY DRAINS. ROUTE DRAIN LINES TOGETHER. SIZE, SLOPE AND SUPPORT PER CODES.

08 CONDENSATE DRAIN DETAIL
SCALE: NONE

NOTES:
1. FURNISH AND INSTALL CONCENTRIC VENT KIT AS REQUIRED BY THE WATER HEATER MANUFACTURER (INSTALL PER THE REQUIREMENTS OF THE UL LISTING AND THE MANUFACTURER'S INSTALLATION INSTRUCTIONS)
2. INDIVIDUAL DIRECT VENT PIPES FOR THE VENT AND COMBUSTION AIR MAY ALSO BE USED AT THE CONTRACTORS OPTION IF APPROVED BY THE WATER HEATER MANUFACTURER (INSTALL PER THE REQUIREMENTS OF THE UL LISTING AND THE MANUFACTURER'S INSTALLATION INSTRUCTIONS)

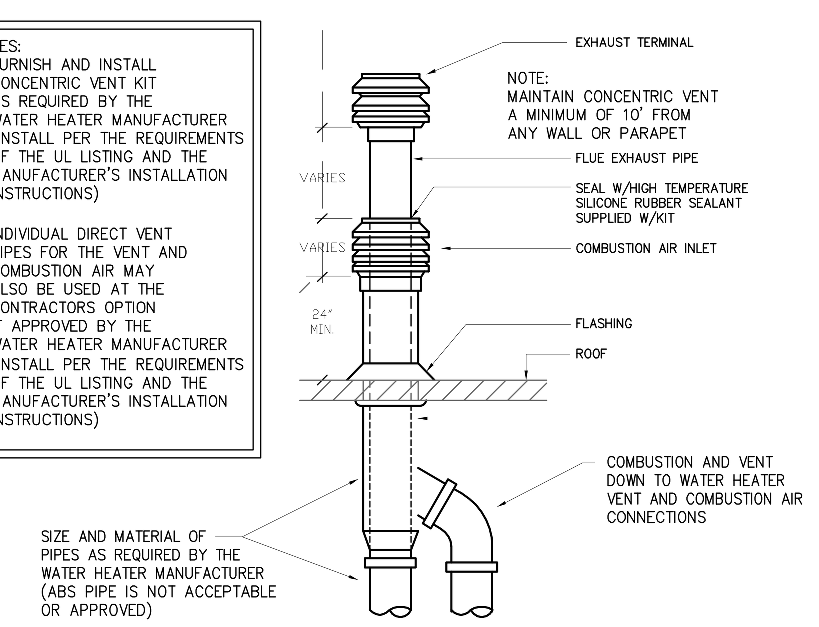

17 WATER HEATER SEPERATED CONCENTRIC VENT (DIRECT VENT) DETAIL
SCALE: NONE

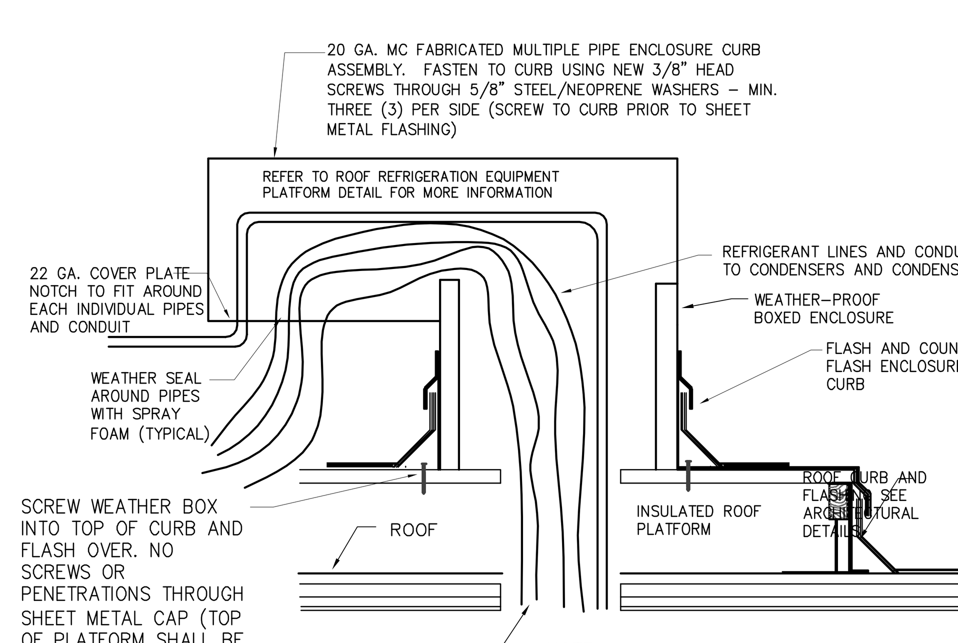

NOTE
REFRIGERANT PIPING SHALL RISE INSIDE PENTHOUSE. SEE ARCHITECTURAL DETAIL AND DETAIL THIS SHEET.

14 PLATFORM WEATHER BOX DETAIL
Scale: NOT TO SCALE

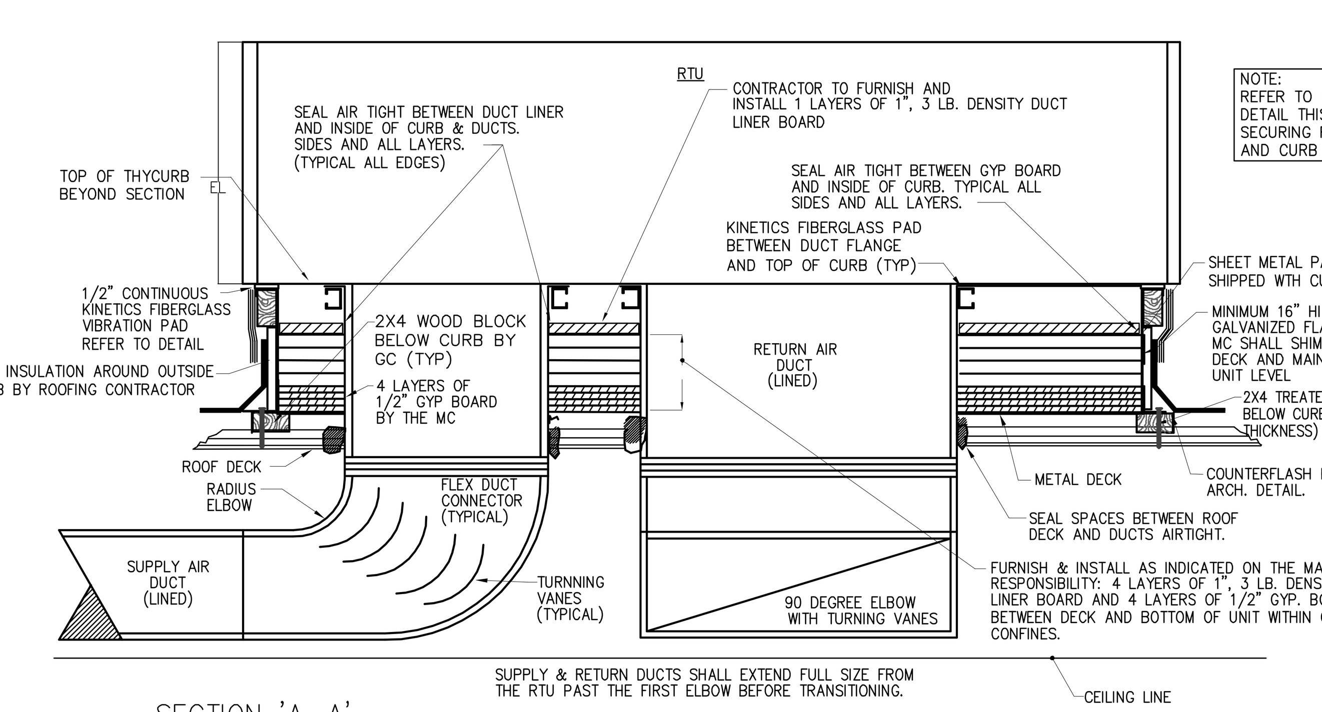

NOTE:
REFER TO RTU RESTRAINT DETAIL THIS SHEET FOR SECURING RTU TO CURB AND CURB TO DECK

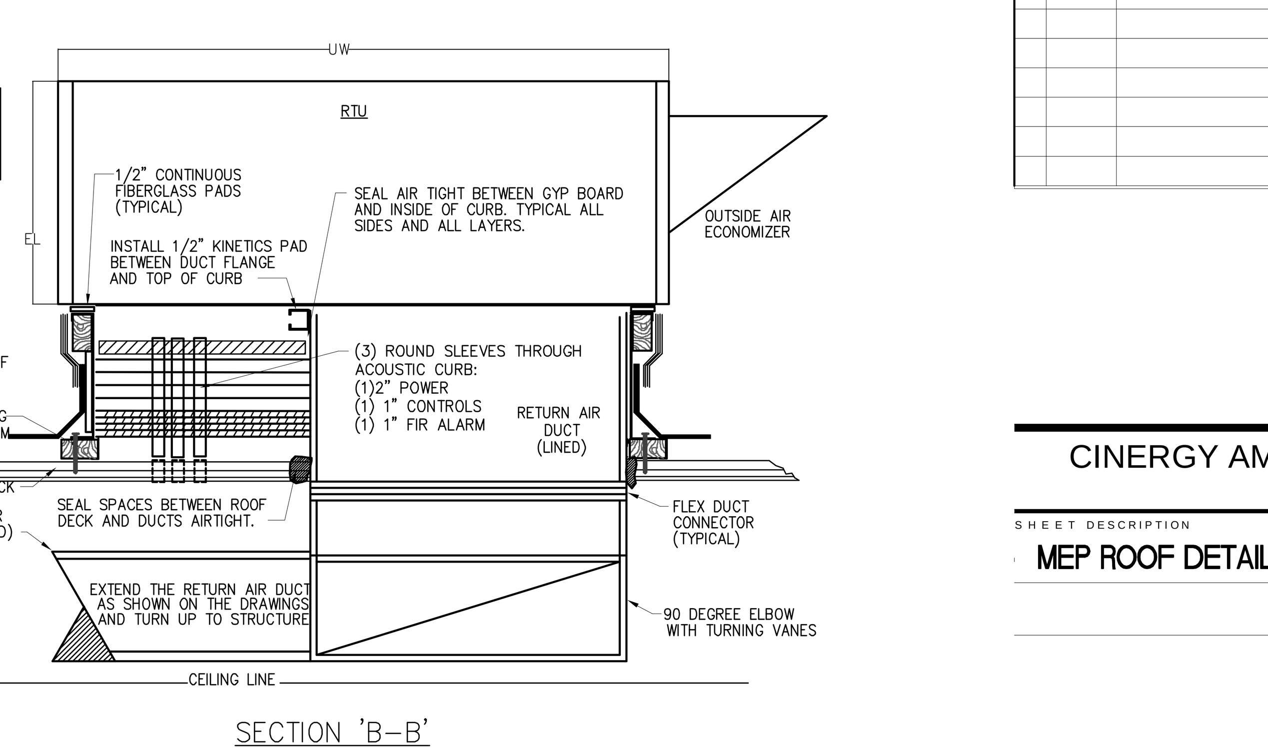

15 ROOFTOP UNIT + CURB DETAIL
SCALE: NONE

5G Studio Collaborative, LLC.
800 Jackson | Suite 500 | Dallas, TX 75202
260 Peachtree Street | Suite 500 | Atlanta, GA 30303

ARCHITECT
5G Studio Collaborative, LLC..
800 Jackson St., Suite 500
Dallas, TX 75202
Rick Walker - 214.670.0050

STRUCTURAL ENGINEER
L.A. Fuess Partners Engineers
3333 Lee Parkway, Suite 300
Dallas, TX 75219
Jeff Truly - 214.871.7010

MEP ENGINEER
EnviroDesign, Inc.
900 Ranch Rd 620 So., Suite C101-301
Austin, TX 78738
Sam Patton - 512.693.9015
Texas PE Firm Number F-5847

24 May. 2017
Sam E. Patton, P.E.
TX PE# 57170

DRAWINGS & SPECIFICATIONS ARE THE PROPERTY OF ENVIRODESIGN. COPIES OF THE DRAWINGS & SPECIFICATIONS RETAINED BY THE CLIENT MAY BE UTILIZED ONLY FOR HIS USE & FOR OCCUPYING THE PROJECT FOR WHICH THEY WERE PREPARED, & NOT FOR THE CONSTRUCTION OF ANY OTHER PROJECT.

REV	DATE	ISSUE
	5/12/17	PERMIT ISSUE
	5/24/17	ISSUE FOR BID

CINERGY AMARILLO

SHEET DESCRIPTION
MEP ROOF DETAILS

2016-151
PROJECT NUMBER

MEP1.2
SHEET NUMBER

Plotted By: Owner 24 May. 2017 Drawing File: J:\Dropbox (EnviroDesign)\EnviroDesign Team Folder\Current\2017-055 Cinergy Amarillo\ 2017-055MEP12.dwg
ALL DRAWINGS AND WRITTEN MATERIAL APPEARING HEREIN CONSTITUTE ORIGINAL AND UNPUBLISHED WORK OF THE ENGINEER AND MAY NOT BE DUPLICATED, USED OR DISCLOSED WITHOUT WRITTEN CONSENT OF ENVIRODESIGN, INC. © 2017 ENVIRODESIGN,INC. ALL RIGHTS RESERVED.