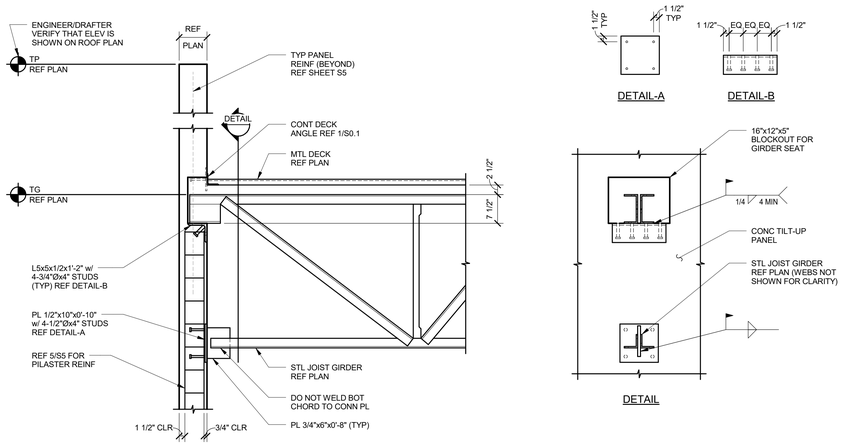

1 JOIST GIRDER BEARING SECTION

3/4" = 1'-0"

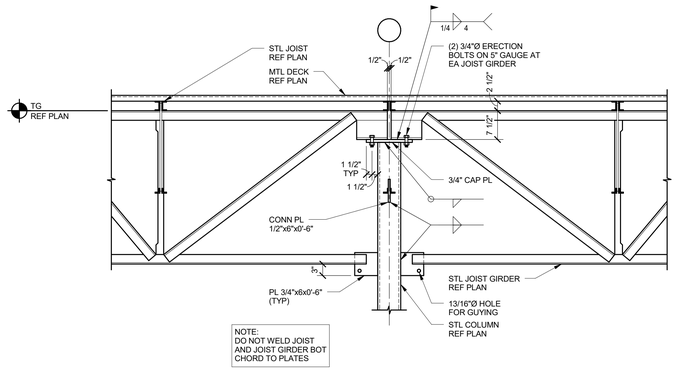

2 JOIST GIRDER / COLUMN CONN SECTION

3/4" = 1'-0"

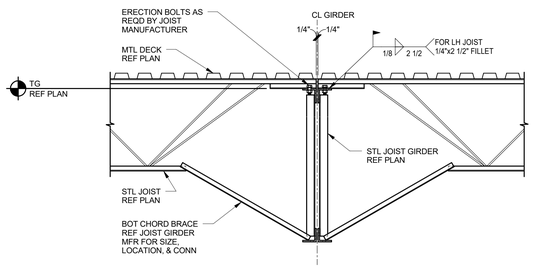

3 JOIST / JOIST GIRDER CONN SECTION

3/4" = 1'-0"

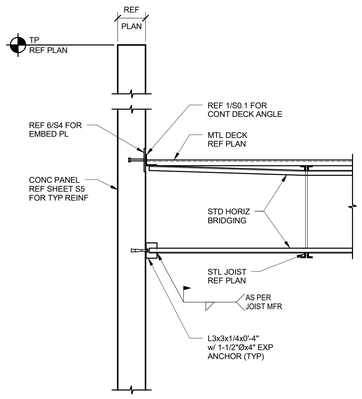

4 BRIDGING CONNECTION SECTION

3/4" = 1'-0"

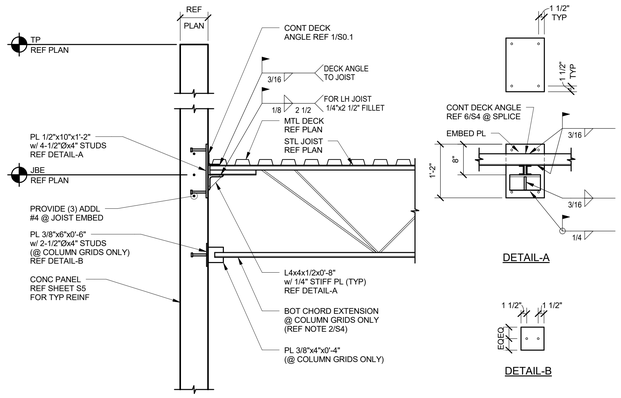

5 JOIST BEARING SECTION

3/4" = 1'-0"

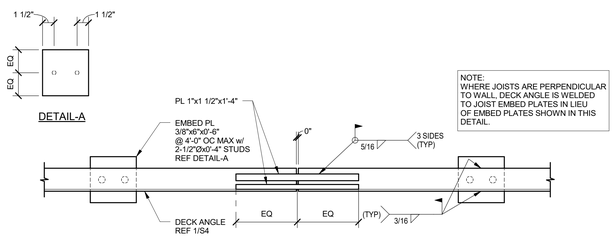

6 CONTINUOUS DECK ANGLE DETAIL

1 1/2" = 1'-0"

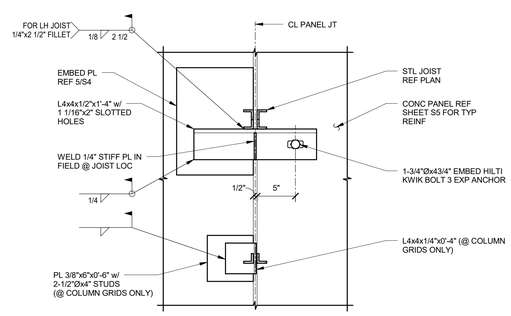

7 JOIST BEARING @ PANEL JOINT DETAIL

1 1/2" = 1'-0"

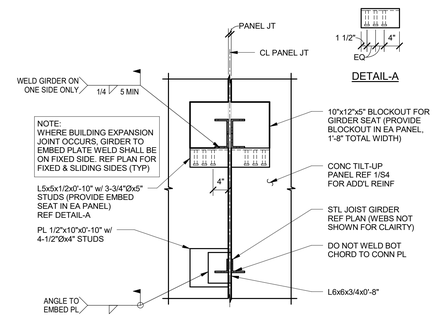

8 GIRDER AT PANEL JOINT DETAIL

3/4" = 1'-0"

ARCHITECT
5G Studio Collaborative, LLC.,
800 Jackson St., Suite 500
Dallas, TX 75202
(CONTACT)

STRUCTURAL ENGINEER
L.A. Fuess Partners
333 Lee Parkway, Suite 300
Dallas, TX 75219
(CONTACT)

MEP ENGINEER
Root Engineering Services
43 FM 3356
Van Alstyne, TX 75495
Adam Harris 903.375.3303

05-24-2017

STATE OF TEXAS
COLIN B. EDWARDS
90916
LICENSED
PROFESSIONAL ENGINEER

PROJECT NO 15084 TX REG#2435
HUNT & JOINER, INC.
Consulting Structural Engineers

REV.	DATE	ISSUE TITLE
1	05-24-17	ISSUE FOR BID

INCOMPLETE DOCUMENTS ARE FOR INTERIM REVIEW ONLY. NOT FOR REGULATORY APPROVAL, PERMIT OR CONSTRUCTION

CINERGY AMARILLO

ROOF FRAMING
SECTIONS

XXXXX
PROJECT NUMBER

S4
SHEET NUMBER